5886630
Do All Board-AW

Parts List

A.	Top Shelf	1 pc
B.	Bottom Shelf	1 pc
C.	Board Assembly	1 pc
D.	Steel Tubes	6 pcs
E.	Round Head Bolts	6 pcs
F.	Short Phillips Head Screws	3 pcs
G.	Long Phillips Head Screws	6 pcs
H.	Metal Plates	3 pcs
I.	Phillips Head Screwdriver	1 pc

∗ Please make sure that you have all the parts indicated above before you begin assembly of this item.
∗ This item should be assembled on a soft surface to prevent scratching the finish during assembly.
∗ This item may require periodic tightening.
* This item is to be assembled by an adult and is not intended to be taken apart by a child.

Hardware Illustrations

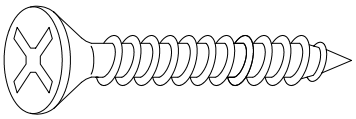

F. Short Phillips Head Screw

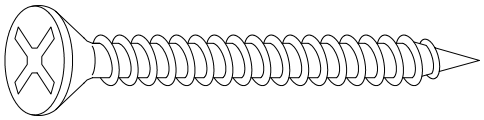

G. Long Phillips Head Screw

R2-5-13-03

5886630
Do All Board-AW

Assembly Instructions

Parts required

A.	Top Shelf	1 pc	F.	Short Phillips Head Screws	3 pcs
B.	Bottom Shelf	1 pc	G.	Long Phillips Head Screws	6 pcs
C.	Board Assembly	1 pc	H.	Metal Plates	3 pcs
D.	Steel Tubes	6 pcs	I.	Phillips Head Screwdriver	1 pc
E.	Round Head Bolts	6 pcs			

1. **Attach Top & Bottom Shelf (A, B)** Align Steel Tubes (D) with the pre-threaded holes in Bottom Shelf (B) and pre-drilled holes in Top Shelf (A). Insert Round Head Bolts (E) through holes in Top Shelf (A) and Steel Tubes (D). Tighten by turning in a clockwise direction. See illustration.
2. **Attach Board Assembly (C)** Align the pre-drilled holes in the bottom of Bottom Shelf (B) with wood dowels in the edge of Board Assembly (C). Press down to make sure the pre-drilled holes in the edge of Bottom Shelf (B) and back of corner blocks align with the pre-drilled holes in the Metal Plates (H). Secure with Short Phillips Head Screws (F) through the Metal Plates (H) into the back of the Bottom Shelf (B) using Phillips Head Screwdriver (H). Secure with the Long Phillips Head Screws (G) through the Metal Plates (H) and Board Assembly (C) into the corner blocks on the Bottom Shelf (B) by using Phillips Head Screwdriver (H) . See illustration.

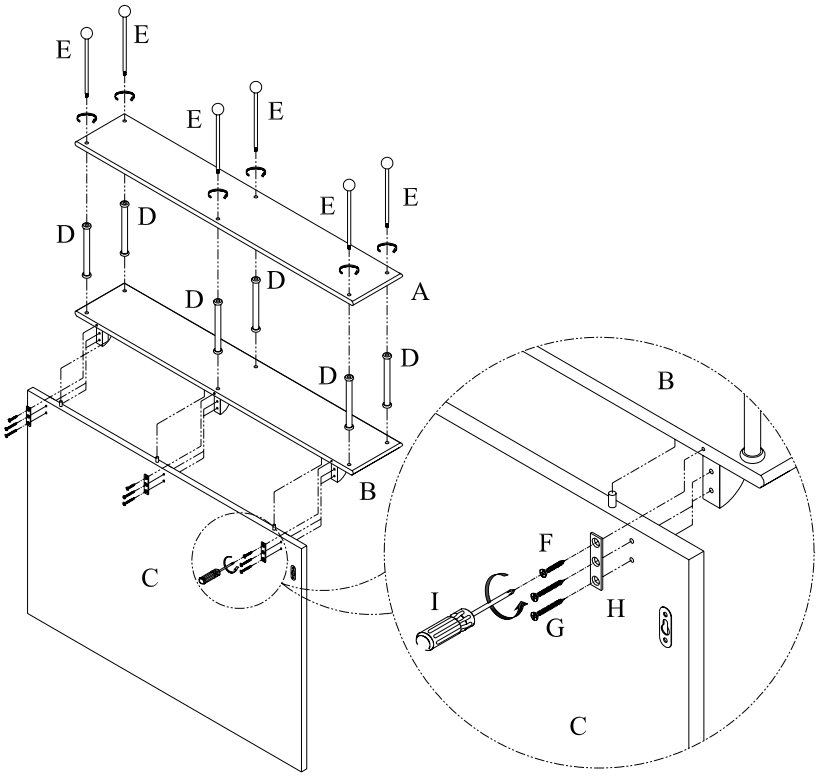

Illustration

R2-5-13-03